FIVEOCEANS®
enjoy your passion

ELECTRIC HOIST

OWNER MANUAL

SINGLE LINE 440 LB /DOUBLE LINE 880 LB

Model: 4337/3781/3781-C1

1 ONE YEAR LIMITED WARRANTY

10014 Premier Parkway
Miramar, FL, US 33025
info@five-oceans.com
www.five-oceans.com

SAVE THESE INSTRUCTIONS
Important safety instructions are included in this manual.

Have questions or need assistance?
Do not return this product to the store!

WE ARE HERE TO HELP!

Visit our website:

www.five-oceans.com

for more info:

- Product Info & Updates
- Frequently Asked Questions
- Tech Bulletins
- Product Registration

– or –

Email us at:
info@five-oceans.com

*We are always working to improve our products. Therefore, the enclosed product may differ slightly from the image on the cover.

ELECTRIC HOIST

SINGLE LINE 440 LB.
DOUBLE LINE 880 LB.

TABLE OF CONTENTS

Introduction 5
Manual Conventions 6
Safety Rules 7
Controls and Features 10
Electric Hoist 10
Assembly 11
Securing the Hoist 11
Surge Protection 11
Grounding 12
Extension Cord Information 12
Electronic Hoist Location 13
Operation 14
Inspection 14
Connecting a Load 14
General Tips for Safe Operation 15
Single Line Operation 15
Double Line Operation 15
Stop Bracket/Line Blocker 17
Hoisting Techniques 18
Maintenance 19
Cleaning 19
Lubrication 19
Cable Assembly Replacement 19
Storage 19
Specifications 20
Performance Specifications 20
Wiring Diagram 21
Parts Diagram 22
Parts List 23
Troubleshooting 24

Congratulations on your purchase of a Five Oceans Power Supply product. We engineered and designed these power supplies to the highest degree, these are the way we build and support all of our products to strict specifications and guidelines. With proper product knowledge, safe use, and regular maintenance, this product should bring years of gratifying service.

Every effort has been made to ensure the accuracy and completeness of the information in this manual, and we reserve the right to change, alter and/or improve the product and this document at any time without prior notice.

Since FO highly value how our products are designed, manufactured, operated and are serviced, and also highly value your safety and the safety of others, we would like you to take the time to review this product manual and other product materials thoroughly and be fully aware and knowledgeable of the assembly, operation, dangers and maintenance of the product before use. Thoroughly familiarize yourself, and make sure others who plan on operating the product fully familiarize themselves too, with the proper safety and operation procedures before each use.

Please always exercise common sense and always lean on the side of caution when operating the product to ensure no accidents, property damage, or injury occurs. We want you to continue to use and be satisfied with your FO product for years to come.

Record the model and serial numbers as well as date and place of purchase for future reference. Have this information available when ordering parts and when making technical or warranty inquiries.

Model Number |

Serial Number |

Date of Purchase |

Purchase Location |

MANUAL CONVENTIONS

This manual uses the following symbols to help distinguish between different kinds of information. The safety symbol is used with a keyword to alert you to potential hazards in operating and maintaining power equipment.

Follow all safety messages to avoid or reduce the risk of any damage, serious injury or death.

DANGER

DANGER indicates an imminently hazardous situation which, if not avoided, will result in death or serious injury.

CAUTION

CAUTION indicates a potentially hazardous situation which, if not avoided, may result in minor or moderate injury.

WARNING

WARNING indicates a potentially hazardous situation which, if not avoided, could result in death or serious injury.

CAUTION

CAUTION used without the safety alert symbol indicates a potentially hazardous situation which, if not avoided, may result in property damage.

NOTE

If you have questions regarding your hoist, we can help.
Please email us at info@five-oceans.com

WARNING
Read this manual thoroughly before operating your hoist. Failure to follow instructions could result in damage, serious injury or death.

WARNING
Do not exceed the rated capacity.

DANGER
Do not use this hoist for lifting or moving people or animals.

DANGER
Keep yourself and others a safe distance to the side of the cable when under tension.

DANGER
Never step over or under a cable or near a cable under load.

WARNING
The wire cable may break before the motor stalls. For heavy loads at or near rated capacity, use a pulley block/snatch block to reduce the load on the wire cable.

WARNING
Hoist is meant for indoor use only, do not operate outside in wet conditions, rain or snow. Electric damage, shock or injury may occur if hoist is used outdoors or in wet environments.

WARNING
Do not use the hoist to secure an item(s) for transport.

WARNING
Unplug the power cord when not in use.

WARNING
Never leave an item(s) attached to the wire cable, lift hook, pulley hook, or loaded when not in use.

CAUTION
Use gloves to protect hands when handling the lift hook, pulley hook or cable. Never let the cable slide through your hands.

CAUTION
Do not wrap the cable around any object and hook it back onto itself.

DANGER
Do not operate if load is not centered under hoist. Do not hoist at any angles.

DANGER
Do not operate if cable is worn, frayed or appears damaged. Replace cable before use.

WARNING

When re-spooling the cable, ensure that the cable spools in the over-wind position with the cable entering the drum from the top, not the bottom.

To re-spool correctly, and while wearing gloves, keep a slight load on the cable while pushing the remote button to draw in the cable. Do not let your hands get within 12 in. (30.5 cm) of the hoist while re-spooling. Turn off the hoist and repeat the procedure until a few inches of cable are left before the stop bracket. Keep hands clear of the hoist, cable and slight load which hoist is under power.

CAUTION

Duration of hoisting pulls should be kept as short as possible.

If the motor becomes uncomfortably hot to the touch, stop hoisting immediately and let it cool down for a few minutes. Do not pull for more than one minute at or near the rated

CAUTION

If the motor stalls, do not maintain power to the hoist.

Electric hoists are designed and made for intermittent use and should not be used in constant duty applications.

WARNING

Never operate a damaged or malfunctioning hoist. If hoist appears damaged or is malfunctioning, disconnect power source and disconnect load.

CAUTION

This hoist is for operation with 120V power sources only. 240V power sources will not power the hoist and may even damage the hoist. Make sure the power source for the hoist is a 120V 3-pronged grounded outlet only.

DANGER

Do not lift any loads over people, animals, or property that cannot be damaged. Falling loads may result in property damage, injury or death.

WARNING

Do not modify the plug in any way or any outlet to fit the plug. Use only 3-prong grounding outlets and 3-wire extension cords with 3-prong grounding plugs.

WARNING

Any supporting structure the hoist will be mounted to must be designed to withstand any load or forces that the load and hoist may apply to the structure.

DANGER

Do not use damaged or broken equipment.

Before each use inspect the hoist and equipment for any damage to the following:

- Hoist
- Wire cable
- Lift hooks/Pulley hooks
- Power cord or plug prongs

If any of the above items or any other items appear to be damaged or broken then replace or fix before use.

CONTROL AND FEATURES

Read this owner's manual before operating your hoist. Familiarize yourself with the location and function of the controls and features. Save this manual for future reference.

Electric Hoist

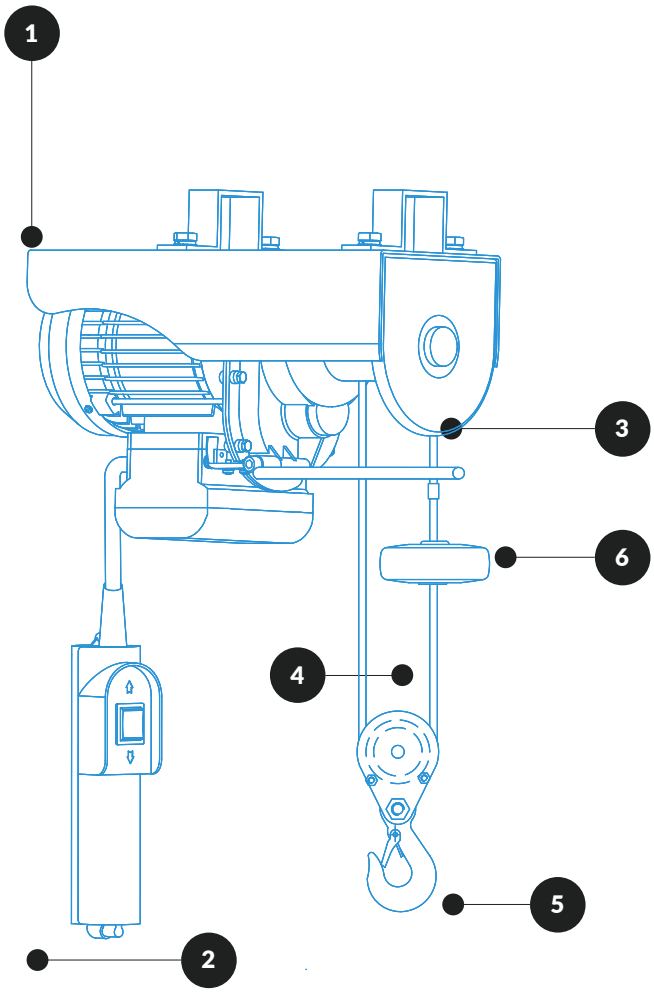

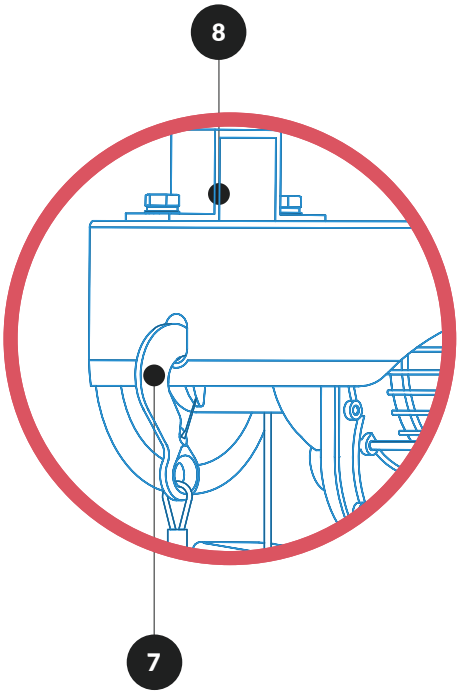

1 **Electric Motor** – 12.5 Amp, 120V AC, Single Phase, 60 Hz.

2 **Remote Control** – Used to retract or extend wire cable.

3 **Stop Bracket** – Used with Line Blocker to stop wire cable from retracting too far into hoist.

4 **Wire Cable**

5 **Pulley Hook** – Used to support load for double line hoist.

6 **Line Blocker** – Used with Stop Bracket to stop wire cable from retracting too far into hoist.

7 **Support Hook** – Used to secure single or double line loads.

8 **Support Bracket** – Used to secure hoist when mounted.

SECURING THE HOIST

This FO 440 lb./880 lb. electric hoist already comes with the remote control, power cord, wire cable and stop bracket attached, and therefore the user only needs to secure the hoist to a sturdy support structure using the support brackets provided.

1. Remove hoist and support brackets from packaging, being careful to set aside the mounting hardware needed.

2. Make sure the supporting structure for the hoist will be secure enough to support the hoist and any load that may be hoisted.

DANGER

Do not attached the hoist to any support structure that is not firmly secured in a straight up and down vertical position. The hoist must remain in a straight up and down vertical position while in use. Loads should **NOT** be hoisted at an angle.

CAUTION

Make sure the hoist is secured to a fixed support structure. It is **NOT** recommended to secure the hoist to a movable support fixture.

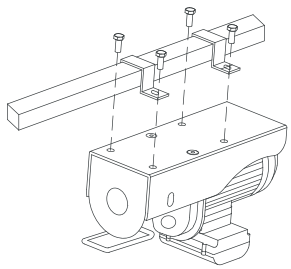

3. Place the support brackets over the structure.

4. Have a person or two help hold the hoist in position under the support brackets so the hoist is aligned with the holes in the support

5. Thread the flat washer ø10 and lock washer ø10 onto the M10x26 bolt.
6. Insert the bolt through the support bracket and into the mounting hole in the top of the hoist. Hand tighten bolt.
7. Repeat for the remaining bolts on the two support brackets.
8. Once all the bolts have been hand tightened and the hoist is in the desired position, firmly tighten all bolts using a 16 mm wrench or socket (not included), until the hoist is secure.

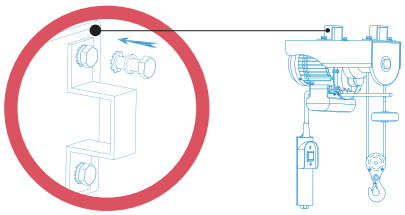

CAUTION

The hoist must be secured with both support brackets (2) and all bolts (4). Do not try and secure a hoist to any structure with missing or damaged parts. Secure firmly before use.

SURGE PROTECTION

While there is no way to prevent voltage fluctuations, electrical equipment may be protected by making sure your electrical equipment is connected to a surge protected outlet or with a rated surge protection device.

CAUTION: Voltage fluctuation may impair the proper functioning of sensitive electronic equipment.

GROUNDING

Your electronic hoist must be properly connected to an appropriate ground to help prevent electric shock.

WARNING

Failure to properly ground the electric hoist can result in electric shock.

A ground terminal prong connected to the power plug has been provided on the power cord. If grounding of the hoist is not properly understood, do not operate until grounding has been explained. We strongly recommend that you consult with a qualified electrician to ensure compliance with local electrical codes if grounding of the product is not fully understood. Improper connection of the equipment or the grounding conductor can result in electric shock. If the cord, plug, or outlet look damaged do not plug into a live terminal. Replace or fix any damaged cords, prongs, or outlets before use. Do not use any adapter or extension to connect the plug to a power source or outlet that is not grounded.

Extension Cord Information

If an extension cord must be used to power your electric hoist, please refer the minimum gauge of cord as it relates to feet needed.

Length	Gauge
25 ft. (7.6 m)	18 AWG Min.
50 ft. (15.2 m)	16 AWG Min.
100 ft. (30.5 m)	14 AWG Min.

WARNING

Use only 3-prong grounding outlets and 3-wire extension cords with 3-prong grounding plugs.

Electronic Hoist Location

A proper hoist work area is recommended. The hoist work area must be clean and well lighted. The work area must not be accessible to children or animals. Loads may be very heavy and property damage, injury or death may occur if distractions are present. The hoist should be located in an area that has enough clearance on all sides of it, to avoid any accidental breaking of the wire cable or dropping of the load.
Try to avoid the following dangers in any hoist work area.

- Any oils, liquids or other slipping hazards on the work area floor
- Confined spacing
- Distractions of any kind
- Dim or poor lighting

NOTE

Electric hoist is for indoor use only. Do not install, operate or store outdoors.

CAUTION

Make sure power cord and remote control cord are always out of the way of the load, and are never in a position to get frayed, pinched or damaged.

DANGER

Do not use if you have a pacemaker.

Electromagnetic fields in close proximity to a pacemaker may cause interference or failure of the pacemaker. People with pacemakers should:

- Consult a doctor before use
- Never operate alone
- Inspect hoist power cord for proper grounding connection and any signs of possible electric shock hazards

Inspection

Before use of the electric hoist, always inspect the hoist, power connections, wire cable, load connections, and work area for any possible damage or hazards. Never connect a load to or operate a hoist, if it or any of it's parts appear to be worn or damaged.

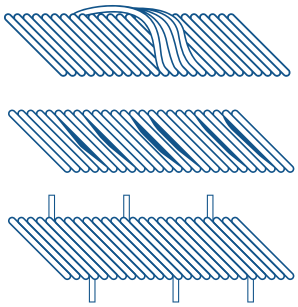

Always check the wire cable for any wear, fraying or damage. Only wire cable in good condition should be used. If the wire cable appears worn, frayed or damaged, **DO NOT** connect any load to or use, replace immediately.

Inspect the wire cable to make sure it is spooled correctly. The wire cable should not be overlapping on itself, have space between the rolls or slack in it. If the wire cable is spooled incorrectly do not connect a load to it or use it until the wire cable has been re-spooled correctly.

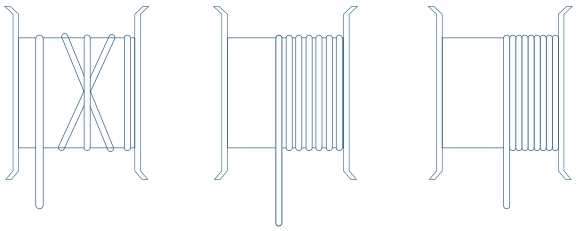

INCORRECT **INCORRECT** **CORRECT**

Connecting a Load

During connection of a load and operation of the hoist, the user should keep hands and fingers clear of pinch points, moving parts and the wire cable. Loose clothing and jewelry should not be worn during operation of the hoist. Gloves and safety goggles should be worn at all times when connecting or
hoisting a load. The cable should never be allowed to slide through the users hands. The user should only grab the pulley or support hook when loading/unloading an item. Never grab the wire cable directly. Attach the load to the pulley or support hook using only rated equipment, such as slings, chairs or hoisting shackles. Connection to the pulley or support hook must be completely secure to

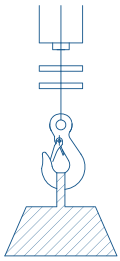

Single Line

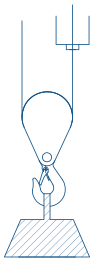

Double Line

CAUTION

If the wire cable becomes kinked or twisted during operation stop use immediately.

Once a load has been properly connected, make sure and do a test lift. Hoist the load 1 in. to 2 in. and pause a moment to inspect all connections and that the equipment can handle the load. Do not pull for more than one minute at or near the rated load.

WARNING

Do not exceed rated load capacity, even while testing a load.

General Tips for Safe Operation
Your FO electric hoist is rated at a 440 lb. single line and 880 lb. double line capacity. Overloads can damage the hoist, motor, wire cable, and/or create a possible hazard for property damage, injury or death. For loads over 440 lb. (200 kg) the use of the pulley hook to double the wire cable line must be used. This will aid in two ways:

(a) reduce the number or cable layers on the drum, as well as,
(b) reduce the load on the wire cable by as much as 50%.

When doubling the line back to the hoist, run the wire cable through the pulley hook and attach to the support hook to the back side of the hoist frame. Get to know your hoist before you actually need to use it. We recommend that you set up a few test runs to familiarize yourself with rigging techniques, the sounds your hoist makes under various loads, the way the cable spools on the drum, etc. Inspect the wire cable and equipment before each use. A frayed or damaged cable shall be replaced immediately. Use only manufacturer's identical replacement cable with the exact specifications. Inspect the hoist installation and bolts to ensure that all bolts are tight before each operation. Store the hoist indoors and in a place that it will not be damaged.

Any hoist that appears to be damaged in any way, is found to be worn, or operates abnormally **MUST BE REMOVED FROM SERVICE UNTIL REPAIRED**. It is recommended that the necessary repairs be made by a manufacturer's authorized repair facility. Only attachments and/or adapters supplied by the manufacturer are to be used.

Single Line Operation

During single line operation, the max rated load capacity is 440 lb. (200 kg). Do not exceed max rated load capacity. Single line loads can be connected with the support hook that comes already attached to the wire cable. The load can be directly connected to the support hook using a properly rated hoisting sling, chain or shackle. Make sure the load is directly underneath hoist and is not at an angle.

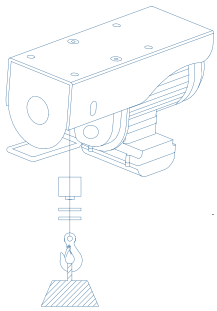

WARNING
Maintain at least 4 wraps (coils) of cable on the drum during operation. Operating with fewer than 4 warps of cable on the drum can cause the cable to pull off the drum.

Double Line Operation
If any load is heavier that 440 lb. (200 kg.), then the double line technique must be used. During double line operation the max rated load capacity is 880 lb. (399 kg). Do not exceed max rated load capacity. During double line operation, the pulley hook must be spooled onto the wire cable. The support hook must be anchored on the back side of the hoist in the designated support hole built into the hoist frame. The hook must securely fit into the support hole, and the safety clasp must be able to fully close to lock the hook in place.

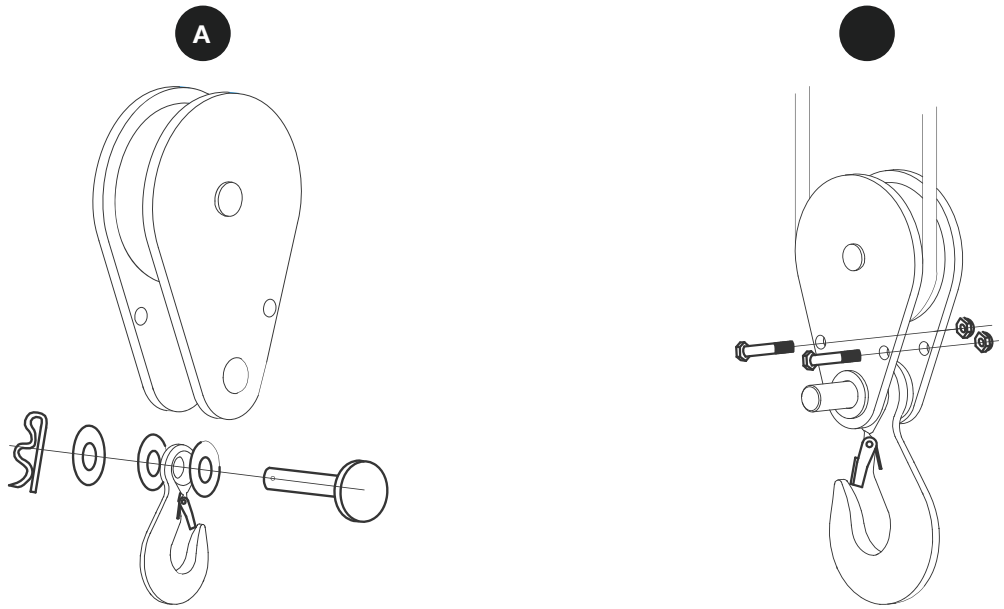

Once the support hook is securely hooked into the double line support hole and the safety clasp has been fully clasped, then the pulley hook can be attached to the wire cable. Please follow these steps for attaching the pulley hook to the wire cable.

1—Remove R-pin from the retaining bolt. (A)

2—Pull retaining bolt out of pulley hook, making sure all washers and hook are captured. (A)

3—Remove the nuts (2) and bolts (2) from the pulley. (B)

4—Place the pulley hook assembly (without the hook attached) onto the wire cable below the line blocker.

5—Make sure the pulley hook roller is aligned on the wire cable and is not in any way askew or oblong seated on the wire.

6—Test the alignment of the pulley hook by sliding it across the wire cable a few inches, back and

7—forth.

8—Slide the bolts (2) back into the pulley and secure with nuts (2). (B)

9—Slide retaining pin back through the pulley, hook and all washers. (A)

10–Replace the R-pin into retaining pin to lock it in place. (A)

Test a small sample load on the pulley hook to make sure the connection is secure and pulley roller

WARNING

If pulley hook roller is not properly aligned damage to the wire cable or accidental load dropping could occur.

WARNING

Maintain at least 4 wraps (coils) of cable on the drum during operation. Operating with fewer than 4 warps of cable on the drum can cause the cable to pull off the drum.

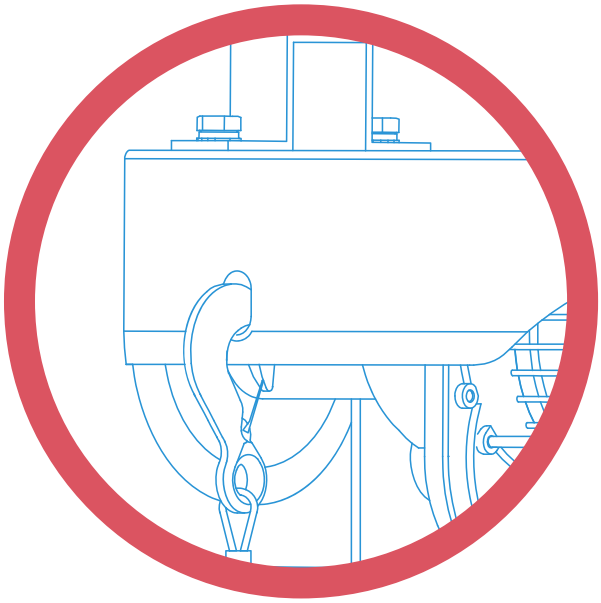

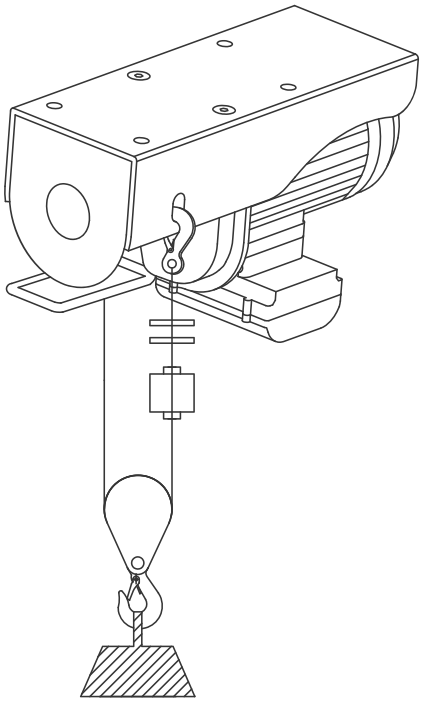

Stop Bracket/Line Blocker

The stop bracket (A) is set up to automatically shut down the hoist if the line blocker (B) begins to pull it upwards. This helps prevent the wire cable from retracting too far on the spool and causing any damage to the spool, cable or hoist.

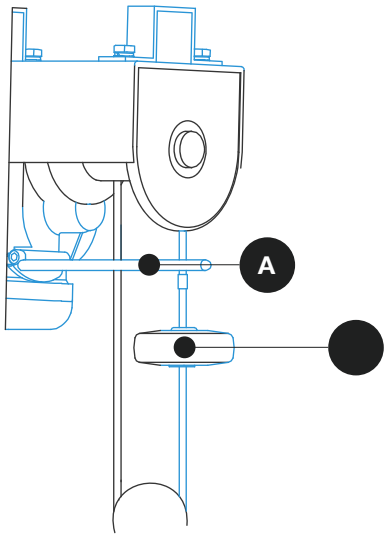

CAUTION

Do not try to re-position or remove the line blocker. It has been preset for safety reasons.

Hoisting Techniques

1—Take time to assess your work area, and make sure it is free of any debris, liquids, and other possible hazards and distractions.

2—Take time to assess your situation and plan your hoist.

3—Put on safety goggles to protect your eyes, gloves to protect your hands, steel toe boots to protect your feet and a hard hat to protect your head.

4—Inspect hoist, power cords and wire cable for excessive wear or damage.

5—Plug power supply into a properly grounded outlet or extension cord with a grounded receptacle and plug.

6—Test the hoist without a load connected. Make sure the wire cable descends and ascends properly without any problems.

7—Connect desired load using only properly rated hoisting slings, chains or shackles.

8—Double check your anchors and make sure all connections are secure.

9—Clear the area. Make sure all operators and bystanders stand clear and that no one is directly above or underneath the load or within 12 in. (30.5 cm) of the wire cable.

10–Begin hoisting. Be sure that the wire cable is winding evenly and tightly around the drum. Avoid shock loads; keep the wire cable under tension.

11–The hoist is meant for intermittent use. Under full load with a single line rig do not power in/out for more than 2 minutes, 30 seconds without letting the motor cool down for 7 minutes, 30 seconds and then resume the hoisting operation.

12–If the hoist must be stopped, with a load connected to it, support anchors should be placed under the load until the hoist is going again.

13–The hoisting operation is complete once the load is on stable ground or has anchors for support placed under it.

14–Disconnect the wire cable from the anchor.

15–Rewind the wire cable. Make sure that any wire already on the drum has spooled tightly and neatly. If not, draw out the wire and re-spool from the point where the cable is tight.

16–Keep your hands clear of the hoist drum and fair-lead as the wire cable is being drawn in.

17–Secure the hook and hook strap.

18–

DANGER
Users and bystanders must keep a minimum distance of 12 in. (30.5 cm) at all times from the hoist and load. If the wire cable breaks serious injury or death could occur if the broken cable “whips” around. More distance is advised as the cable length increases.

WARNING
Support anchors are highly recommended if a load can not be placed on stable ground. Make sure the support anchors can withstand the full weight of the load being

The owner/operator is responsible for all periodic maintenance.

WARNING
Never operate a damaged or defective hoist.

WARNING
Improper maintenance will void your warranty.

Complete all scheduled maintenance in a timely manner. Correct any issue before operating the hoist.

NOTE
For service or parts assistance, contact or help email us at: info@five-oceans.com

Cleaning

Use a damp cloth to clean the exterior surfaces of the hoist. Use a soft bristle brush to remove excess dirt and oil. Use an air compressor (25 PSI) to clear dirt and small debris from the wire cable spool and other tight places.

CAUTION
DO NOT spray water directly on the hoist or wire cable. **DO NOT** wipe the wire cable with the damp cloth. Use only compressed air to clean the wire cable.

Lubrication

All moving parts within the Electric Hoist having been Lubricated using high temperature lithium grease at the factory. No internal lubrication is required. Lubricate cable assembly periodically using a light penetrating oil.

Cable Assembly Replacement

It is recommended that any wire cable or spool modification be performed by a manufacturer's authorized repair facility, and that only manufacturer-supplied parts be used.

Storage

It is recommended the electric hoist is stored indoors, in a clean dry place, free from sunlight and moisture.

1. Make sure the hoist is properly cleaned before storage.
2. Make sure the wire rope is drawn onto the spool as much as it can be without damage.
3. Make sure to tie up all cords.
4. Store in a place that moisture can not damage the hoist.
5. Store in place that excess dust or debris can not damage the hoist.

Performance Specifications

Single Line Rated Pull	440 lb. (200 kg
Double Line Rated Pull	880 lb. (399 kg)
Lifting Speed	33 ft./Per Minute (single line)
	16.5 ft./Per minute (double line)
Lifting Height	38 ft. (single line)
	19 ft. (double line)
Motor	120V AC, Single Phase, 60 Hz
Current	12.5 Amps
Power	850W
Cable	5/32 in. (D) x 39.4 ft. (L) [3.8 mm (D) x 12 m (L)]
Net Weight	70 lb. (31 kg)
Height	8 5/8" (219 mm)
Width	3 3/4" (146 mm)
Length	14 1/4 " (362 mm)

*Do not pull for more than 2 minutes, 30 seconds. Before 2 minutes, 30 seconds, stop hoisting and let it cool down for 7 minutes, 30 seconds. Electric hoists are designed and made for intermittent use and should not be used in constant duty applications.

Wiring Diagram

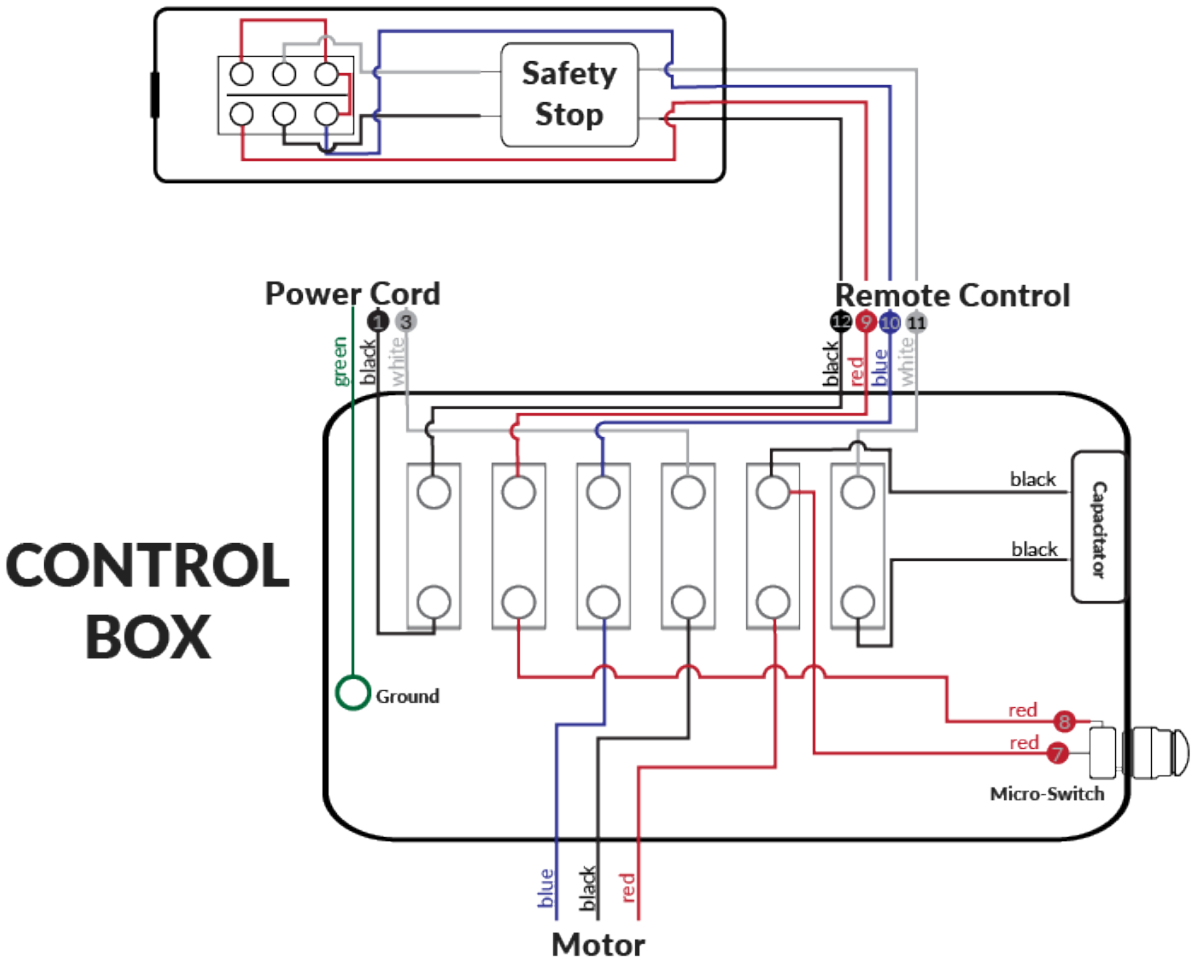

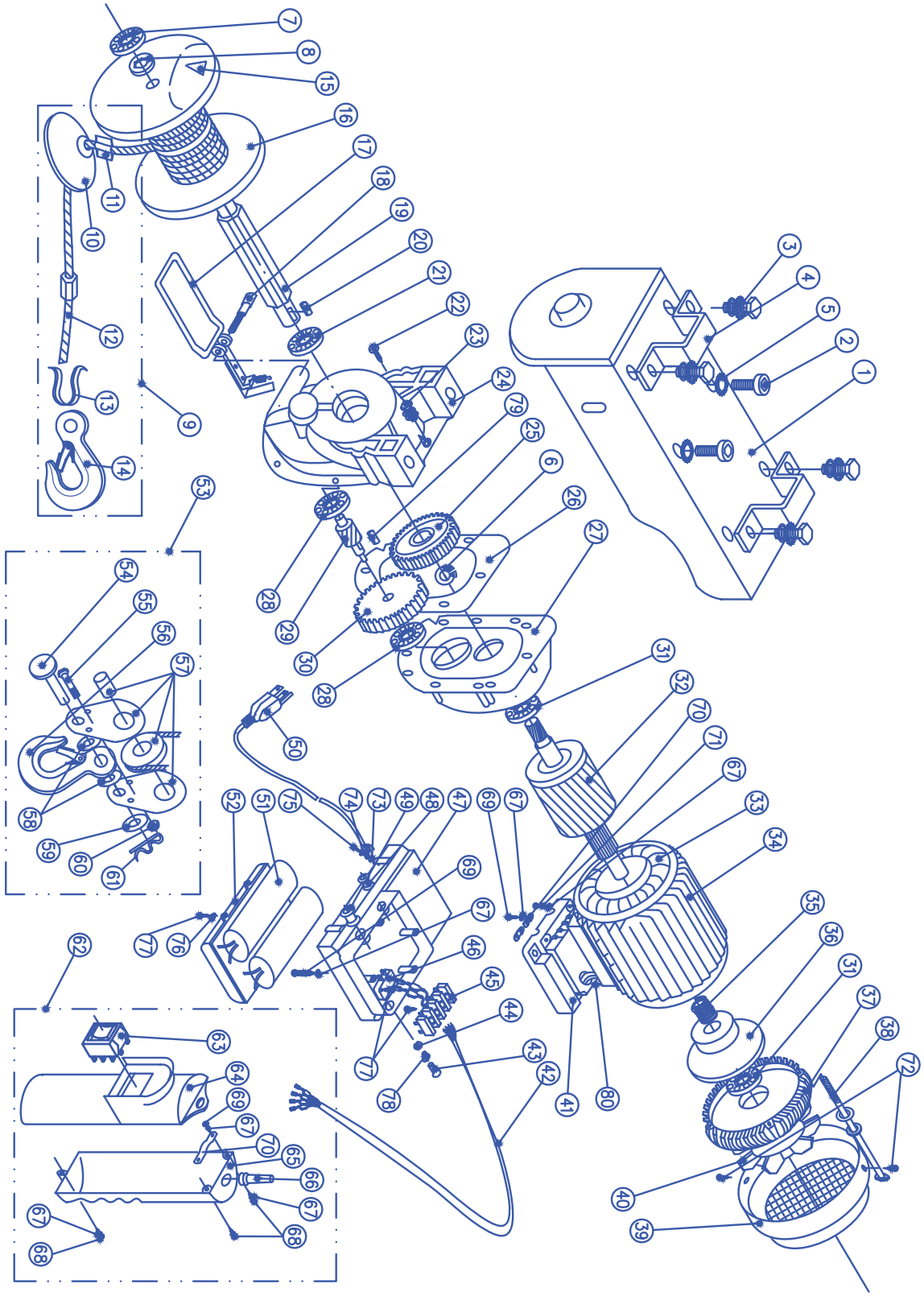

1 Housing 1
2 Cap Screw (M10 x 30) 2
3 Assembling Bolt (M10 x 26) 4
4 Fixing Ring 2
5 Lock Washer-Teeth (ø10) 2
6 Circlip (ø17) 1
7 Bearing (6003RS) 1
8 Washer 1
9 Wire Rope Assembly 1
10 Rope Block 1
11 Rope Crimp 2
12 Wire Rope 1
13 Rope Thimble 1
14 Rope Hook 1
15 Rope Wedge 1
16 Drum 1
17 Stop Bracket 1
18 Cap Screw (M8x45) 1
19 Drum Shaft 1
20 Key (5x16) 1
21 Bearing (6203RS) 1
22 Cross Head Bolt (M5x16) 2
23 Assembling Bolt (M5x17) 6
24 Gearbox 1
25 Secondary Gear 1
26 Gasket 1
28 Front Cover 2
29 Bearing (6201) 1
30 Idler Gear 1
31 Primary Gear 2
32 Bearing (6202RS) 1
33 Rotor 1
34 Stator 1
35 Motor Housing 1
36 Spring 1
37 Brake Drum 1
38 Motor Cover 4
39 Assembling Bolt (M5 x 154) 1
40 Fan Hood 1
41 Fan Blade 1
42 Upper Junction Box 1
43 Cable 1
44 Limit Switch Shaft 1
45 Split Washer (ø6) 1
46 Terminal Block 1
47 Limit Switch 1
48 Junction Box 1
49 Strain Relief Bushing (S) 1
50 Strain Relief Bushing 1
51 Power Cord 1
52 Capacitor 1
53 Junction Box Cover 1
54 Pulley Assembly 1
55 Pin 2
56 Bolt (M5x30) 1
57 Hook 1
58 Pulley 2
59 Plastic Washer 1
60 Washer (ø10) 2
61 Lock Nut (M5) 1
62 R Pin 1
63 Switch Assembly With Cable 1
64 Switch 1
65 Handle Cover 1
66 Handle Housing 1
67 Cord Sheath 1
68 Washer (ø4) 17
69 Tapping Screw (ST3.5x18) 3
70 Tapping Screw (ST3.5x16) 10
71 Cable Clamp 3
72 Screw (M4×12) 4
73 Screw (M3×6) 2
73 Lock Washer-Teeth (ø4) 1
74 Lock Washer (ø4) 1
75 Screw (M4×8) 1
76 Washer (ø3) 4
77 Tapping Screw (ST2.9x14.7) 8
78 Switch Shaft Sheet 1
79 Bolt (M5x30) 1
80 Key (5x12) 1
81 Socket (M6x8) 1

PROBLEM	CAUSE	SOLUTION
Motor does not click or turn	No electrical power	Plug in and secure power cord to a grounded electrical 120V power source
	Pinched power cable	Check all power cord connections and make sure nothing is resting on top of, or
	Defective remote control	Replace remote control
Motor runs slowly or without normal power	Insufficient current or voltage	The voltage supply is weak. Check to make sure voltage supply is 120V
Motor overheating	Hoist running time is too long	Allow hoist to cool down
Motor runs in one direction only	Defective remote assembly	Replace remote assembly

For further technical support:

Technical Service
info@five-oceans.com

WARRANTY
FIVE OCEANS POWER EQUIPMENT
1 YEAR LIMITED WARRANTY

All Five Oceans® products sold by Baron USA, LLC or any of the product resellers is warranted to be free from defects in material and workmanship from date of purchase.

1. **PRODUCT**: Five Oceans Electric Hoist

2. **WARRANTY PERIOD**:
Warranty from purchase date
- **1 year warranty**

3. **CONDITIONS AND LIMITATIONS**:
a. This warranty only applies to the original Buyer and it is not transferable.
b. Proof of purchase is required for warranty service. If a product purchased in the USA.
c. The warranty shall be limited to the repair or replacement of any parts of the product which are defective in materials or workmanship.
d. Responsibility for the selection of products appropriate for the use intended by the Buyer shall rest solely with the Buyer.
e. This warranty does not cover any incidental costs, incurred for the investigation, removal, carriage, transport or installation of the product.
f. A unit provided as an exchange or replacement parts will be subject to the warranty of the original unit. The length of the warranty governing the exchanged unit will remain calculated by reference to the purchase date of the original unit.

4. **WARRANTY EXCLUSIONS**:
This warranty does not cover the following:
a. Normal wear: Products with mechanical and electrical components need periodic parts and service to perform well. This warranty does not cover repair when normal use has exhausted the life of a part or the equipment as a whole.
b. Environmental conditions, including but not limited to extreme temperatures, etc.
c. Normal maintenance is not covered by this warranty.

Other Exclusions - This warranty excludes:
- Cosmetic defects such as paint, decals, etc.
- Corrosion & Normal Wear and tear of items such as winch cable, chains, hooks, power/electric cables, etc.
- Accessory parts such as storage covers.

5. **VOIDING OF THE WARRANTY**:

This warranty under the following circumstances:

a. Use of a product in an application for which it was not designed or intended;
b. Failure to service or maintain the product in accordance with the manufacturer's recommendations;
c. Faulty or deficient installation of the product
d. Any modification or alteration of the product;
e. Conditions that exceed the product's designed capacity, performance, specifications or safe working loads.
f. This warranty will not apply if the product is deemed to have been misused, abused, neglected, involved in an accident, abused, used/loaded beyond the product's limits, modified, installed improperly or connected incorrectly to any electrical component.
g. Use of parts that are not original Five Oceans

6. **LIMITS OF IMPLIED WARRANTY AND CONSEQUENTIAL DAMAGE**:

a. Baron USA, LLC or any of the product resellers disclaims any obligation to cover any loss of time, use of this product, freight, or any incidental or consequential claim by anyone from using this product.
b. THIS WARRANTY IS IN LIEU OF ALL OTHER WARRANTIES, EXPRESS OR IMPLIED, INCLUDING WARRANTIES OF MERCHANTABILITY OR FITNESS FOR A PARTICULAR PURPOSE.
c. Baron USA, LLC or any of the product resellers will not be liable for death, injuries to persons or property or for incidental, contingent, special or consequential damages, loss or expense arising in connection with the use or inability whatever, regardless of whether damage, loss or expense results from any act or failure to act by Baron USA, LLC or any of the product resellers, whether negligent or willful, or from any other reason.

CONTACT INFORMATION

Five Oceans
Customer Service
10014 Premier Parkway, Miramar, FL, US 33025
info@five-oceans.com | www.five-oceans.com